»Passion«

GLASS DESIGN



- a thousand opportunities

- high quality furniture fittings

SISO DENMARK

All specifications stated in the catalogue are errors and omissions excepted

SISO A/S tager forbehold for trykfejl samt ændringer i produktets specifikationer.

Für Druckfehler und Irrtümer ist jede Haftung ausgeschlossen. Produktänderungen behalten wir uns vor.

SISO A/S
MILEPARKEN 11
DK - 2740 SKOVLUNDE
(COPENHAGEN)
DENMARK
PHONE: (+45) 45 830 900

DISTRIBUTOR

CONTENTS



CONCEPT »SQUARE« 4

GLASS DOOR HINGES (WOOD TO GLASS) 5-6

GLASS DOOR HANDLES 7

GLASS DOOR LOCKS 8-12

GLASS DOOR HINGE, F/NARROW FRAMES 13-14

CONCEPT OVERVIEW 15-16



CONCEPT »BADGE« 17

GLASS DOOR HINGES (WOOD TO GLASS) 18-19

GLASS DOOR HANDLES 20

GLASS DOOR LOCKS 21-25

GLASS DOOR HINGE, F/NARROW FRAMES 26-27

CONCEPT OVERVIEW 28-29



CONCEPT »U-SEE« 30-34
HINGES & LOCKS F/GLASS TO GLASS.
UV-GLUEING REQUIRED



CONCEPT »SEE-ME« 35-37
HINGES F/GLASS TO GLASS & GLASS TO WOOD.
DRILLING REQUIRED

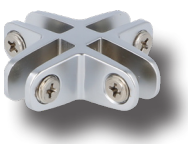

CONCEPT »CONNECT« 38-39
GLASS CONNECTORS

OVERVIEW 40-41
»U-SEE«, »SEE-ME« & »CONNECT«

CONCEPT »SQUARE«



- NO DRILLING REQUIRED
- 4 - 6 mm GLASS
- FOR WOOD CABINETS
- HINGES, LOCKS & HANDLES IN SAME MATCHING »SQUARE« DESIGN



TOP & BOTTOM HINGE »SQUARE«

F/Wood/Glass. F/Inset doors. W/Catch function.

Material:	Zamak
Size:	47 x 30 x 40 mm (D/H/L)
Glass thickness:	4 – 6 mm
Max door size:	1000 x 400 mm (H/W)
Opening:	90 or 180 DG
Item No.:	
Chrome Plated	# 15.06.210-5
Alu finish	# 15.06.211-5
Black Anodized	# 15.06.212-5



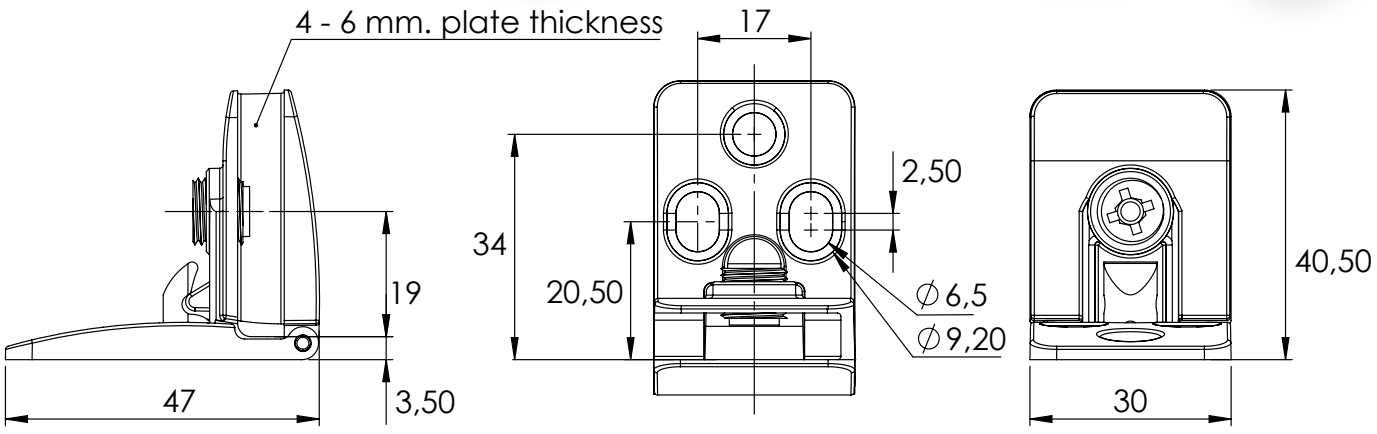

Screw recommendation:
Euro-screw Ø6,3mm or
CSK-screw Ø4,5mm

CENTRE HINGE »SQUARE«

F/Wood/Glass. F/Inset doors. W/Catch function.

Material:	Zamak
Size:	47 x 30 x 40 mm (D/H/L)
Glass thickness:	4 – 6 mm
Max door size:	1000 x 400 mm (H/W)
Opening:	90 or 180 DG
Item No.:	
Chrome Plated	# 15.06.280
Alu finish	# 15.06.281
Black Anodized	# 15.06.282



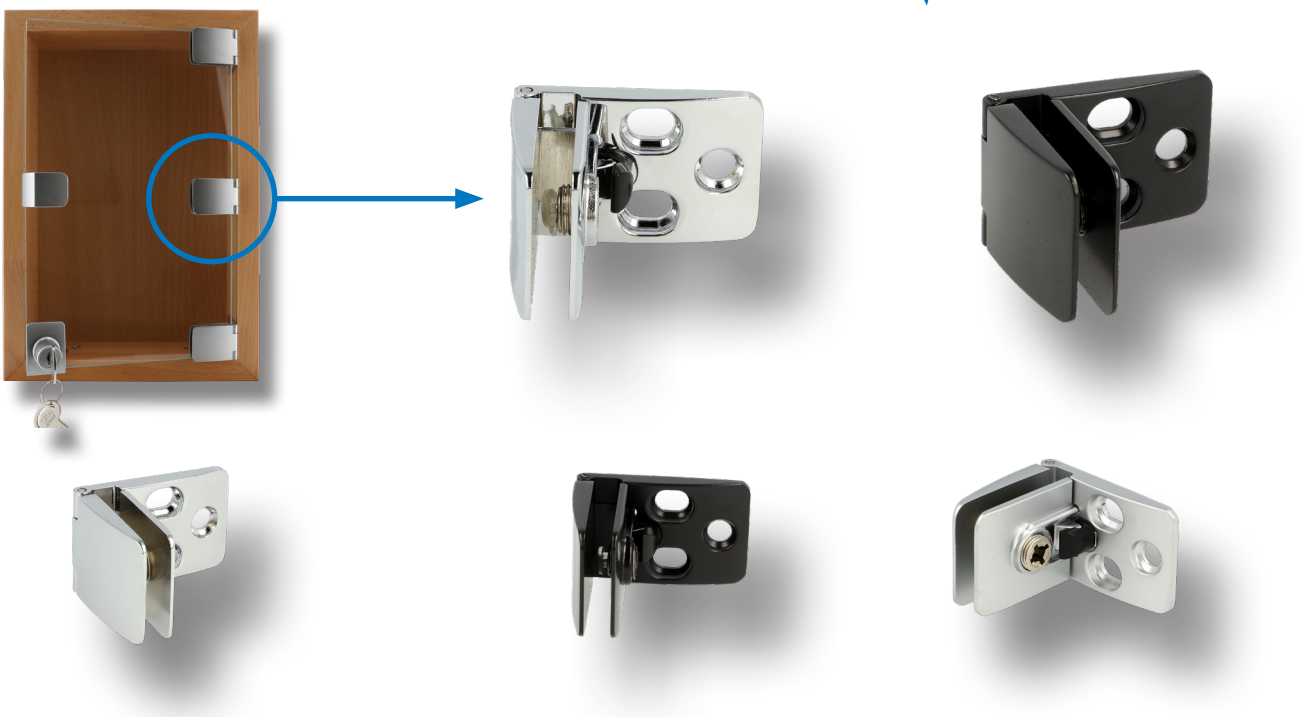

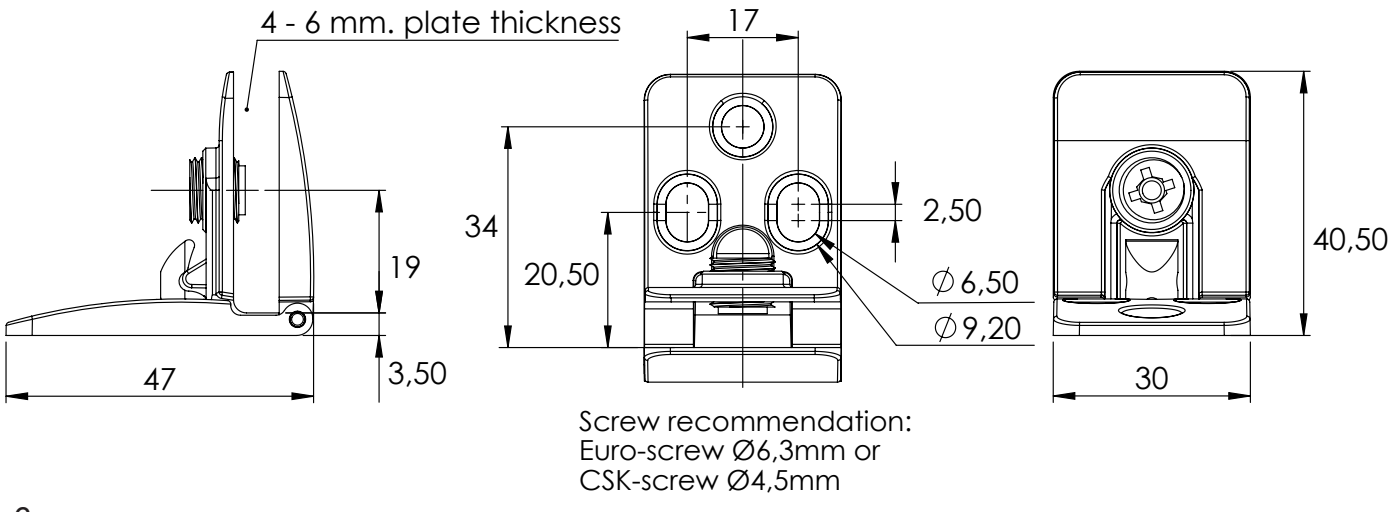

Screw recommendation:
Euro-screw Ø6,3mm or
CSK-screw Ø4,5mm



SINGLE DOOR HANDLE »SQUARE«

Material:	Zamak
Size:	26 x 34 mm
Glass thickness:	4 – 6 mm
Item No.:	
Chrome Plated	# 17.40.060
Alu finish	# 17.40.061
Black Anodized	# 17.40.062



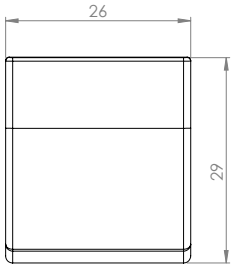

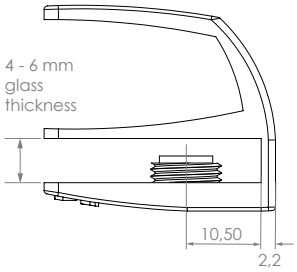

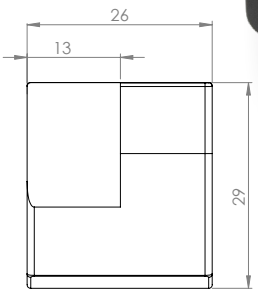



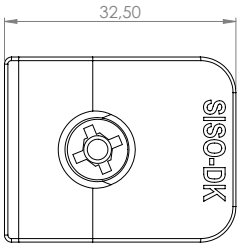

Single

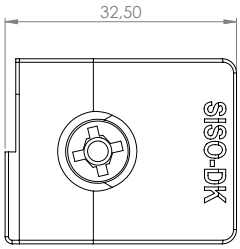

Double



DOUBLE DOOR HANDLE »SQUARE«

W/Side-wall cut to minimize the gab between the glass doors.

Material:	Zamak
Size:	26 x 34 mm
Glass thickness:	4 – 6 mm
Item No.:	
Chrome Plated	# 17.40.080
Alu finish	# 17.40.081
Black Anodized	# 17.40.082





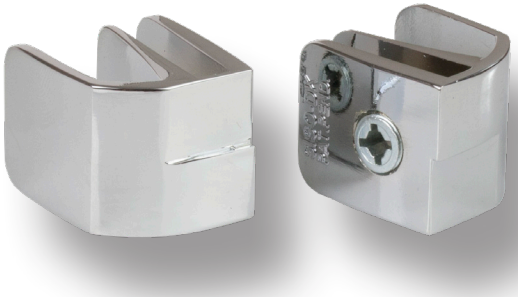

GLASS DOOR LOCK »SQUARE« F/SINGLE DOOR

W/SISO oval metal keys. 400 key combinations or key alike. Also available with Master key & interchangeable cylinder.

Material:	Zamak
Size:	40 x 30 mm
Glass thickness:	4 – 6 mm

Item No.:

Chrome Plated	# 14.09.520
Alu finish	# 14.09.521
Black Anodized	# 14.09.522





SINGLE DOOR LOCK W/
DOUBLE DOOR STRIKER









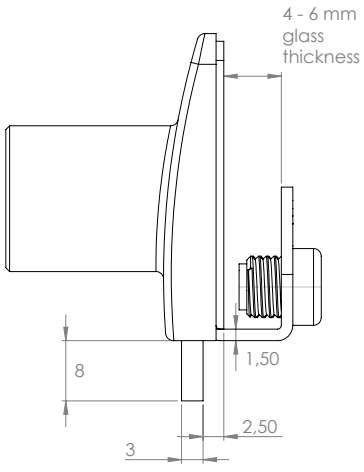

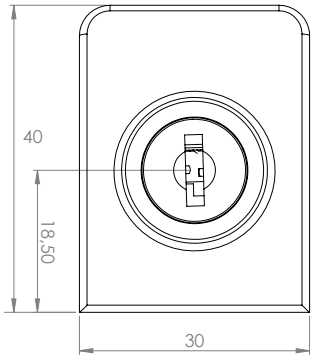

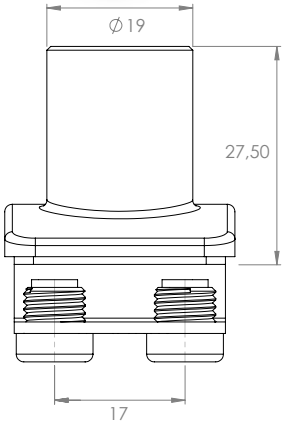



DOUBLE DOOR STRIKER »SQUARE« F/SINGLE DOOR LOCK

To be used with single door lock for double doors.

Material:	Zamak
Size:	40 x 30 mm
Glass thickness:	4 – 6 mm
Item No.:	
Chrome Plated	# 14.09.530
Alu finish	# 14.09.531
Black Anodized	# 14.09.532







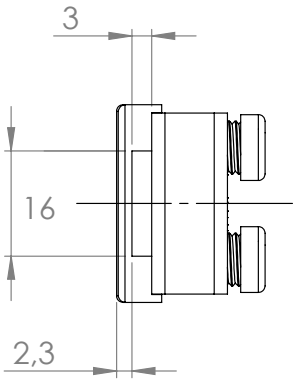

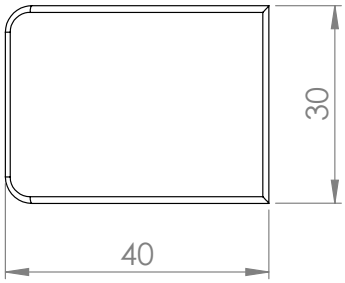

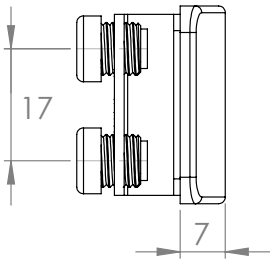

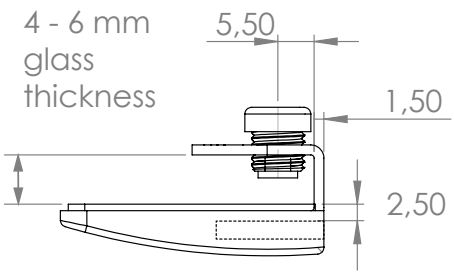

EDGE STRIKER »SQUARE« F/SINGLE DOOR

To be used when glass door lock is to be flush with the edge of the cabinet.
W/Knock in pins.

Material:	Zamak
Size:	40 x 30 mm
Knock-in pins:	Ø5 x 9 mm
Item No.:	
Chrome Plated	# 14.09.535
Alu finish	# 14.09.536
Black Anodized	# 14.09.537









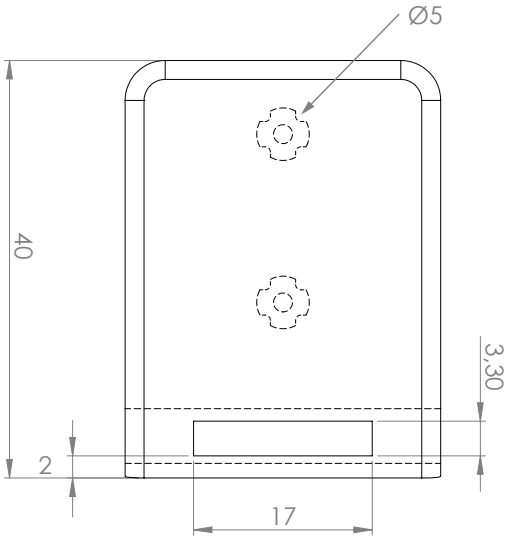

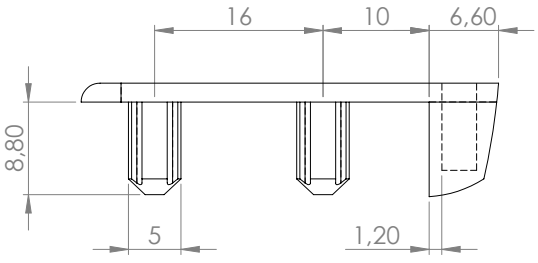

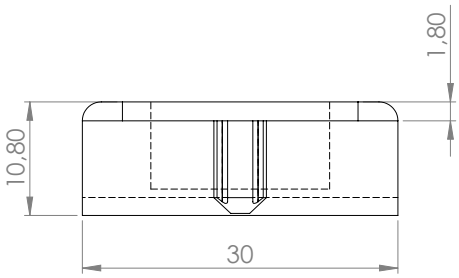



GLASS DOOR LOCK »SQUARE«
F/DOUBLE DOORS

W/SISO oval metal keys. 400 key combinations or key alike. Also available with Master key & interchangeable cylinder.

Material:	Zamak
Size:	40 x 42 mm
Glass thickness:	4 – 6 mm
Item No.:	
Chrome Plated	# 14.09.555
Alu finish	# 14.09.556
Black Anodized	# 14.09.557



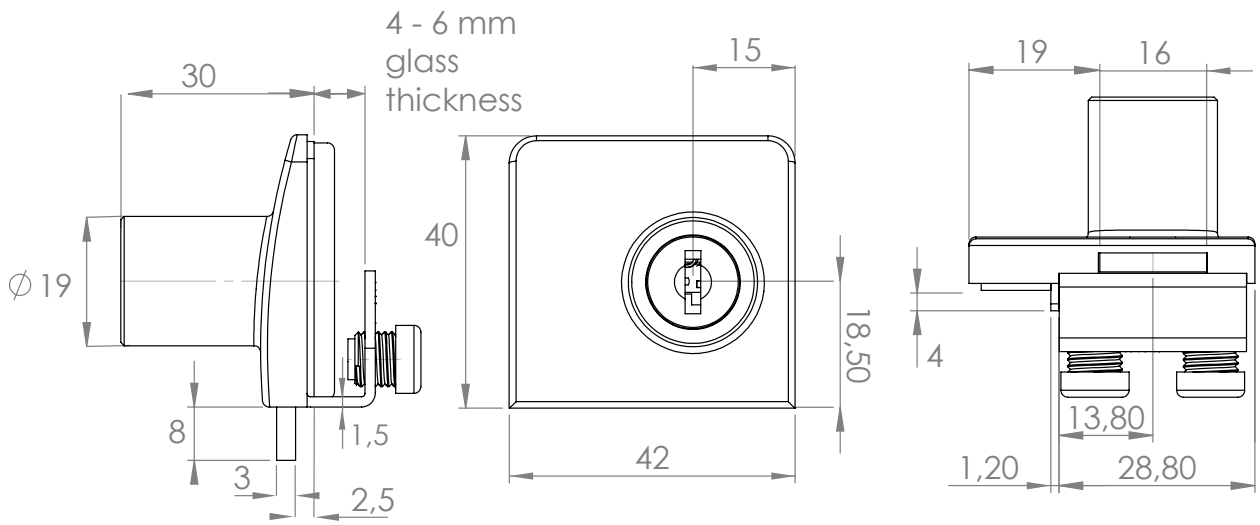

EDGE STRIKER »SQUARE« F/DOUBLE DOOR LOCK

To be used when glass door lock is to be flush with the edge of the cabinet. W/Knock in pins.

Material:	Zamak
Size:	40 x 42 mm
Knock-in pins:	Ø5 x 9 mm

Item No.:

Chrome Plated	# 14.09.565
Alu finish	# 14.09.566
Black Anodized	# 14.09.567









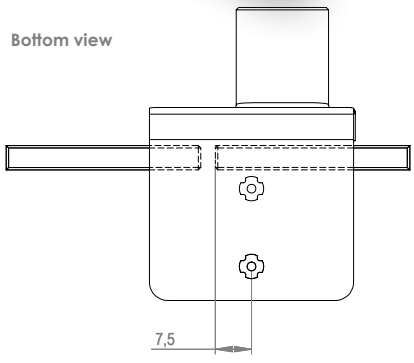

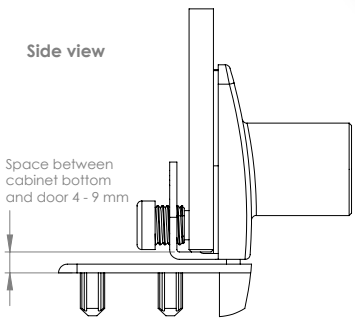

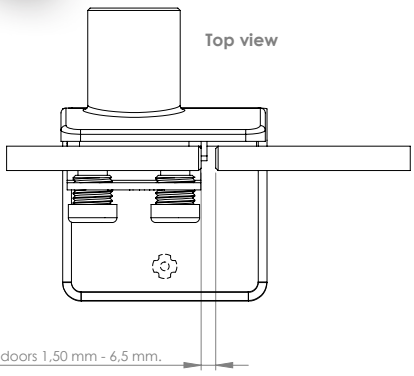

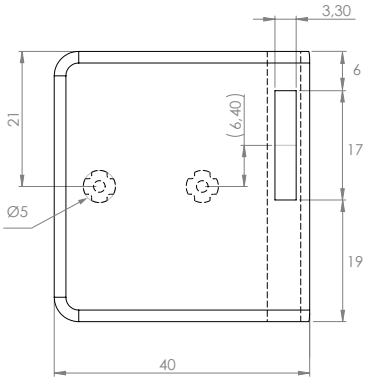

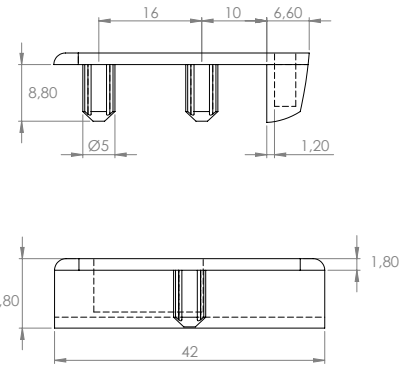

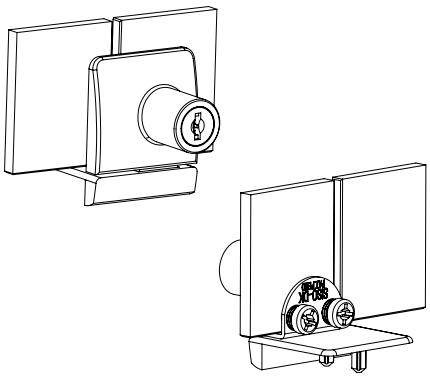



TOP & BOTTOM HINGE »SQUARE« F/NARROW FRAMES

F/Wood/Glass. F/Inset doors. W/Catch function.
Ideal for cabinets with narrow frame

Material:	Zamak
Size:	27 x 30 x 43 mm (D/H/L)
Glass thickness:	4 – 6 mm
Max door size:	1000 x 400 mm (H/W)
Opening:	90 or 105 DG
Item No.:	
Chrome Plated	# 15.06.215
Alu finish	# 15.06.216
Black Anodized	# 15.06.217







SHORT MOUNTING PLATE



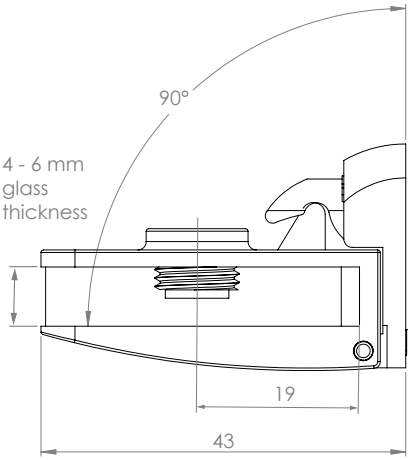

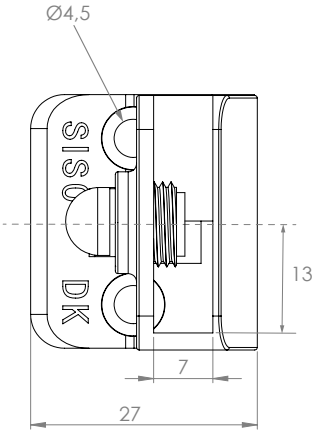

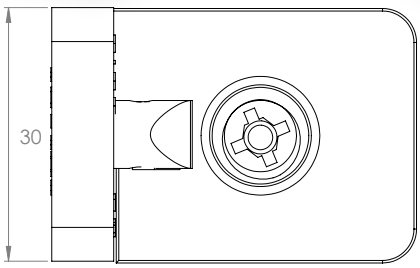

CENTRE HINGE »SQUARE« F/NARROW FRAMES

F/Wood/Glass. F/Inset doors. W/Catch function.
Ideal for cabinets with narrow frame

Material:	Zamak
Size:	27 x 30 x 43 mm (D/H/L)
Glass thickness:	4 – 6 mm
Max door size:	1000 x 400 mm (H/W)
Opening:	90 or 105 DG
Item No.:	
Chrome Plated	# 15.06.235/260 (R/L)
Alu finish	# 15.06.236/261 (R/L)
Black Anodized	# 15.06.237/262 (R/L)

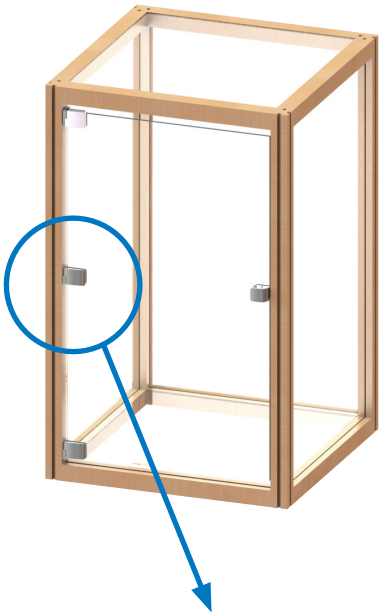

Right





Left



SHORT MOUNTING PLATE

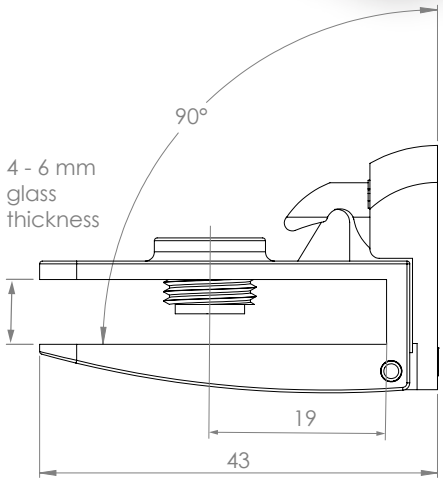

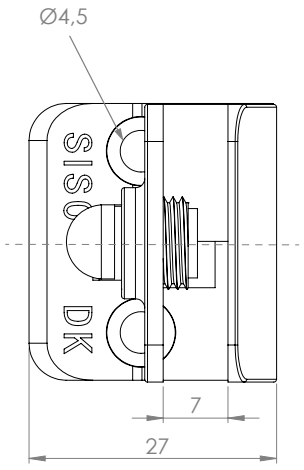

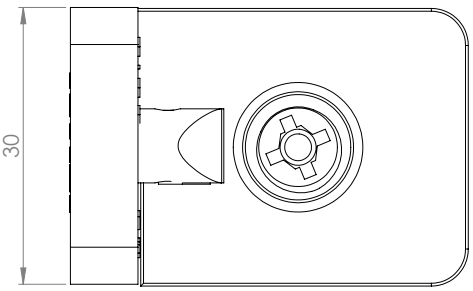



Top & Bottom Hinge

Chrome Plated	# 15.06.210-5
Alu Finish	# 15.06.211-5
Black Anodized	# 15.06.212-5



Centre Hinge

Chrome Plated	# 15.06.280
Alu Finish	# 15.06.281
Black Anodized	# 15.06.282



Handle Single Door

Chrome Plated	# 17.40.060
Alu Finish	# 17.40.061
Black Anodized	# 17.40.062
Gold Plated	# 17.40.063
Bronze Plated	# 17.40.064



Handle Double Doors

Chrome Plated	# 17.40.080
Alu Finish	# 17.40.081
Black Anodized	# 17.40.082
Gold Plated	# 17.40.083
Bronze Plated	# 17.40.084



Glass Door Lock f/ Single Doors

Chrome Plated	# 14.09.520
Alu Finish	# 14.09.521
Black Anodized	# 14.09.522



Glass Door Lock f/ Double Doors

Chrome Plated	# 14.09.555
Alu Finish	# 14.09.556
Black Anodized	# 14.09.557
Gold Plated	# 14.09.558
Bronze Plated	# 14.09.559



Double Door Striker f/ Single Door Lock

Chrome Plated	# 14.09.530
Alu Finish	# 14.09.531
Black Anodized	# 14.09.532
Gold Plated	# 14.09.533
Bronze Plated	# 14.09.534

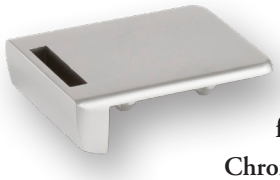

Edge Striker f/ Single Door Lock

Chrome Plated	# 14.09.535
Alu Finish	# 14.09.536
Black Anodized	# 14.09.537
Gold Plated	# 14.09.538
Bronze Plated	# 14.09.539



Edge Striker f/ Double Door Lock

Chrome Plated	# 14.09.565
Alu Finish	# 14.09.566
Black Anodized	# 14.09.567
Gold Plated	# 14.09.568
Bronze Plated	# 14.09.569



Top & Bottom Short Hinge

Chrome Plated	# 15.06.215
Alu Finish	# 15.06.216
Black Anodized	# 15.06.217



Centre Short Hinge R/L

Chrome Plated	# 15.06.235/260
Alu Finish	# 15.06.236/261
Black Anodized	# 15.06.237/262

SPARE PARTS

ZAMAK SCREW W/SOFT TIP F/HINGES & HANDLES



4mm Hex & PZD

NPL	# 15.06.243-1
Black	# 15.06.243-5

ZAMAK SCREW W/EXTENSION F/HINGES & HANDLES



4mm Hex & PZD

NPL	# 15.06.244-1
Black	# 15.06.244-2

ZAMAK SCREW W/SOFT TIP F/LOCKS



4mm Hex & PZD

NPL	# 14.09.238-5
Black	# 14.09.239

BLANK PASSION METAL KEYS



NPL # 14.04.108-9

CONCEPT »BADGE«



- NO DRILLING REQUIRED
- 4 - 6 mm GLASS
- FOR WOOD CABINETS
- HINGES, LOCKS & HANDLES IN SAME MATCHING »BADGE« DESIGN

TOP & BOTTOM HINGE »BADGE«

F/Wood/Glass. F/Inset doors. W/Catch function.

Material:	Zamak
Size:	47 x 30 x 40 mm (D/H/L)
Glass thickness:	4 – 6 mm
Max door size:	1000 x 400 mm (H/W)
Opening:	90 or 180 DG
Item No:	
Chrome Plated	# 15.06.200-5
Alu finish	# 15.06.201-5
Black Anodized	# 15.06.202-5









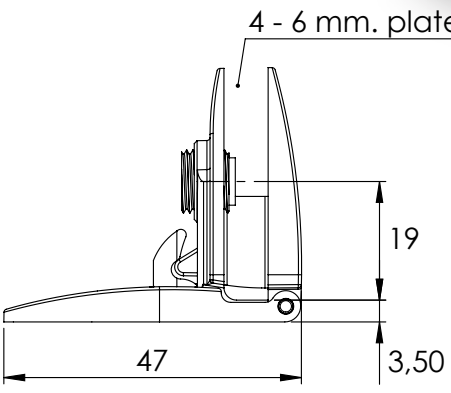

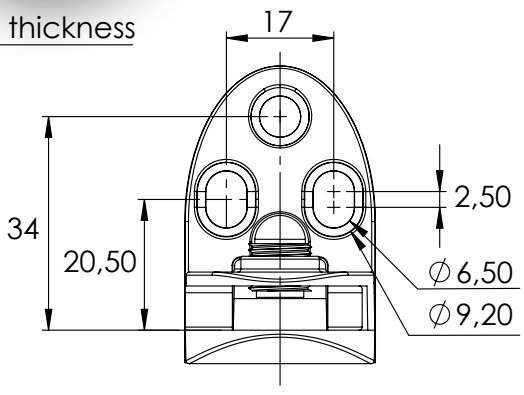

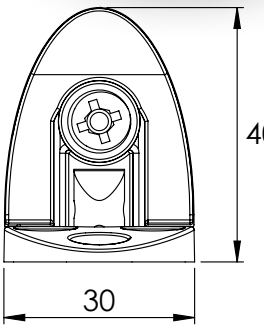

Screw recommendation:
Euro-screw Ø6,3mm or
CSK-screw Ø4,5mm



CENTRE HINGE »BADGE«

F/Wood/Glass. F/Inset doors. W/Catch function.

Material:	Zamak
Size:	47 x 30 x 40 mm (D/H/L)
Glass thickness:	4 – 6 mm
Max door size:	1000 x 400 mm (H/W)
Opening:	90 or 180 DG
Item No:	
Chrome Plated	# 15.06.285
Alu finish	# 15.06.286
Black Anodized	# 15.06.287



Right



Left

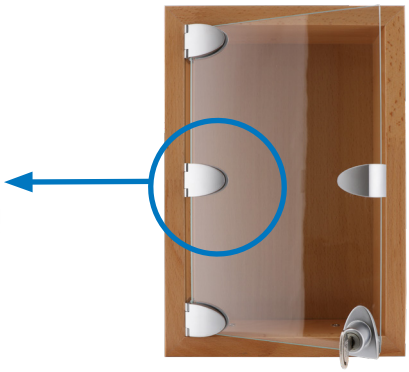







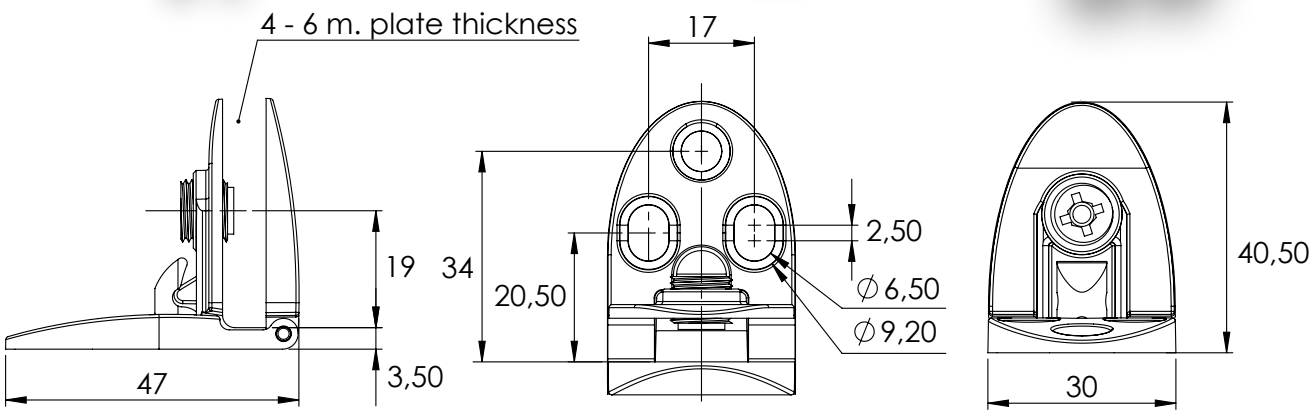

Screw recommendation:
Euro-screw Ø6,3mm or
CSK-screw Ø4,5mm

SINGLE & DOUBLE GLASS DOOR HANDLE »BADGE«

SINGLE DOOR HANDLE »BADGE«

Material:	Zamak
Size:	26 x 34 mm
Glass thickness:	4 – 6 mm
Item No.:	
Chrome Plated	# 17.40.050
Alu finish	# 17.40.051
Black Anodized	# 17.40.052









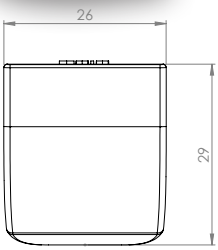

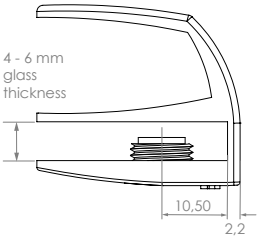

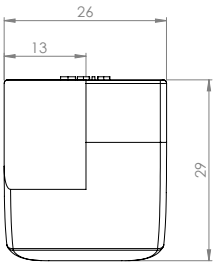

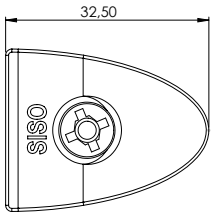

Single

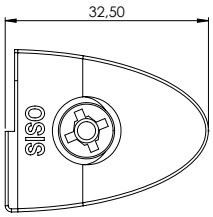

Double

DOUBLE DOOR HANDLE »BADGE«

W/Side-wall cut to minimize the gab between the glass doors.

Material:	Zamak
Size:	26 x 34 mm
Glass thickness:	4 – 6 mm
Item No.:	
Chrome Plated	# 17.40.070
Alu finish	# 17.40.071
Black Anodized	# 17.40.072









SINGLE DOOR LOCK W/
DOUBLE DOOR STRIKER

GLASS DOOR LOCK »BADGE«
F/SINGLE DOORS

W/SISO oval metal keys. 400 key combinations or key alike. Also available with Master key & interchangeable cylinder.

Material:	Zamak
Size:	40 x 30 mm
Glass thickness:	4 – 6 mm
Item No.:	
Chrome Plated	# 14.09.500
Alu finish	# 14.09.501
Black Anodized	# 14.09.502











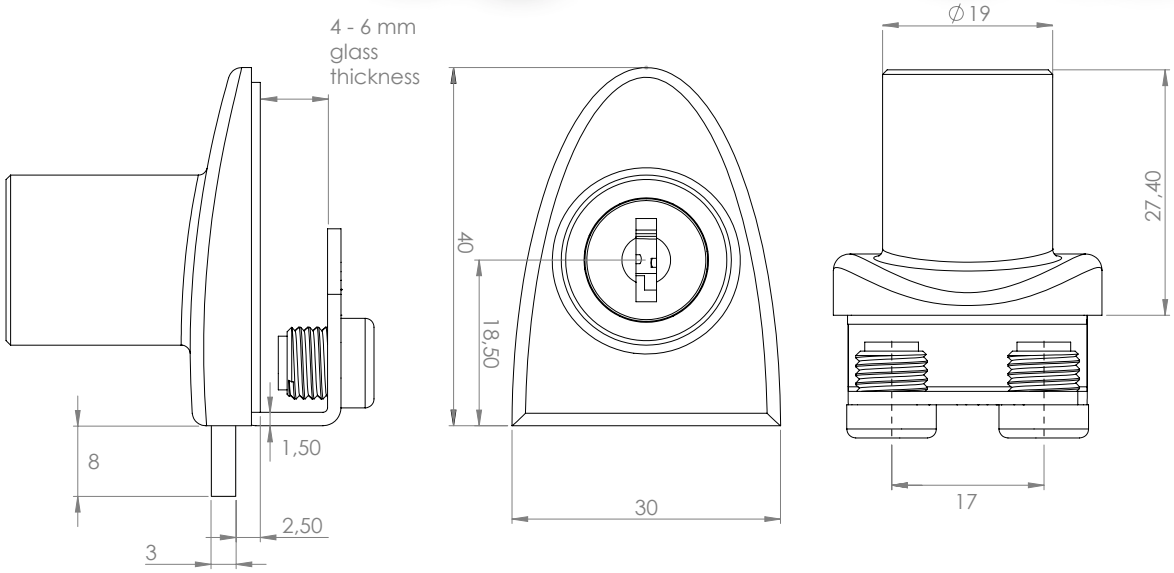

DOUBLE DOOR STRIKER »BADGE«
F/SINGLE DOOR LOCK

To be used with single door lock for double doors.

Material:	Zamak
Size:	40 x 30 mm
Glass thickness:	4 – 6 mm
Item No.:	
Chrome Plated	# 14.09.510
Alu finish	# 14.09.511
Black Anodized	# 14.09.512









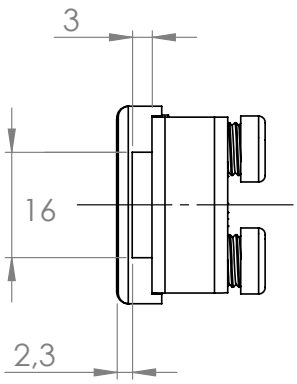

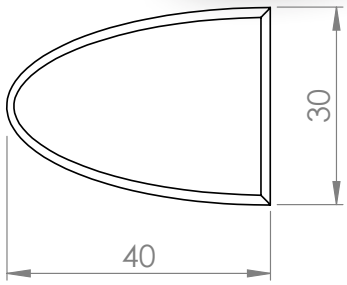

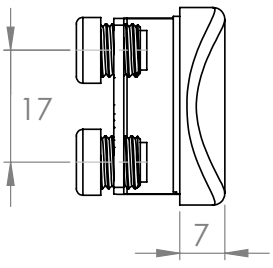

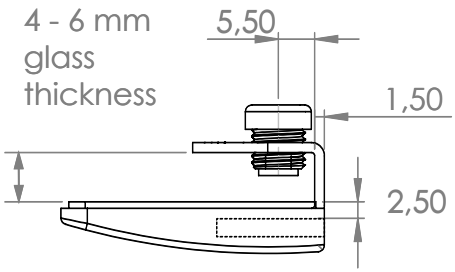



EDGE STRIKER »BADGE« F/SINGLE DOOR LOCK

To be used when glass door lock is to be flush with the edge of the cabinet. W/Knock in pins.

Material:	Zamak
Size:	40 x 30 mm
Knock-in pins:	Ø5 x 9 mm
Item No.:	
Chrome Plated	# 14.09.515
Alu finish	# 14.09.516
Black Anodized	# 14.09.517





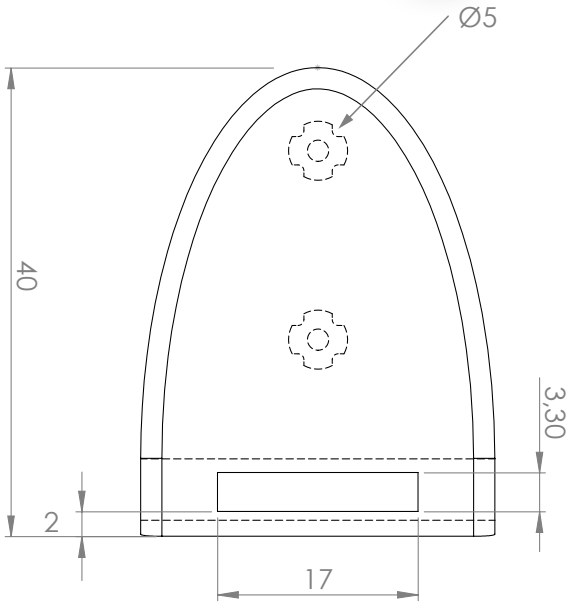

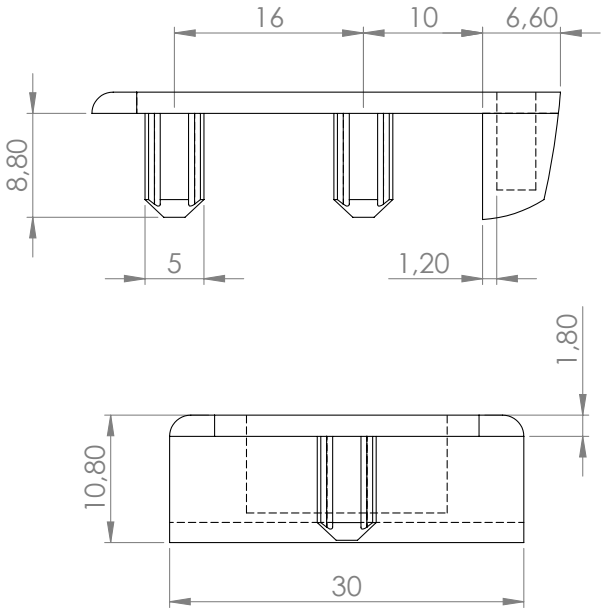

GLASS DOOR LOCK »BADGE« F/DOUBLE DOORS

To be used with single door lock for double doors.

Material:	Zamak
Size:	40 x 42 mm
Glass thickness:	4 – 6 mm
Item No.:	
Chrome Plated	# 14.09.540
Alu finish	# 14.09.541
Black Anodized	# 14.09.542













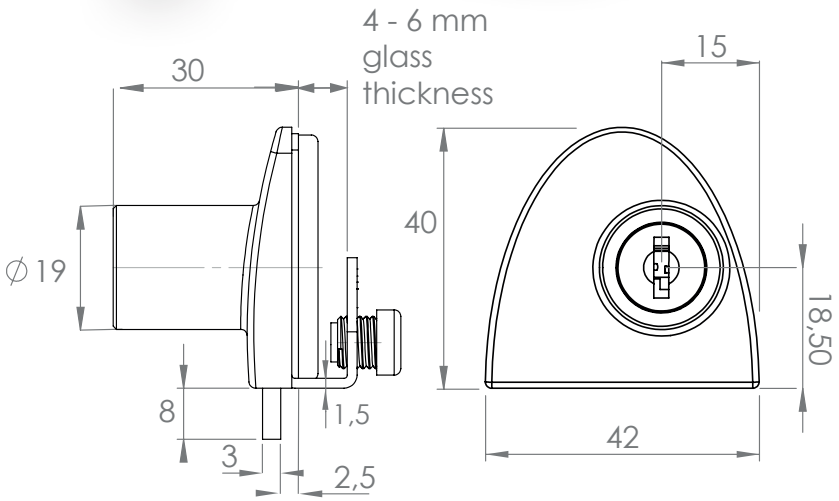



EDGE STRIKER »BADGE« F/DOUBLE DOOR LOCK

To be used with single door lock for double door lock to be flush with the edge of the cabinet. W/ Knock in pins.

Material:	Zamak
Size:	40 x 42 mm
Knock-in pins:	Ø5 x 9 mm
Item No.:	
Chrome Plated	# 14.09.550
Alu finish	# 14.09.551
Black Anodized	# 14.09.552





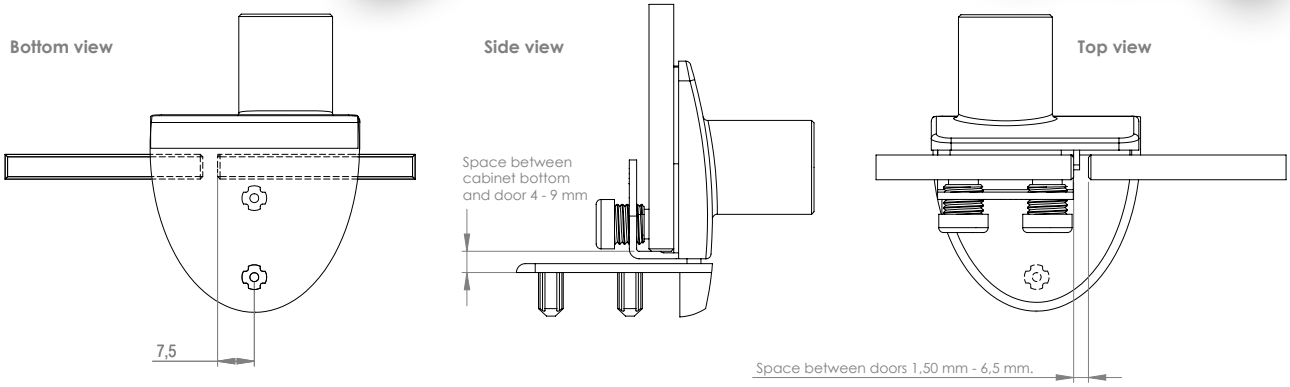

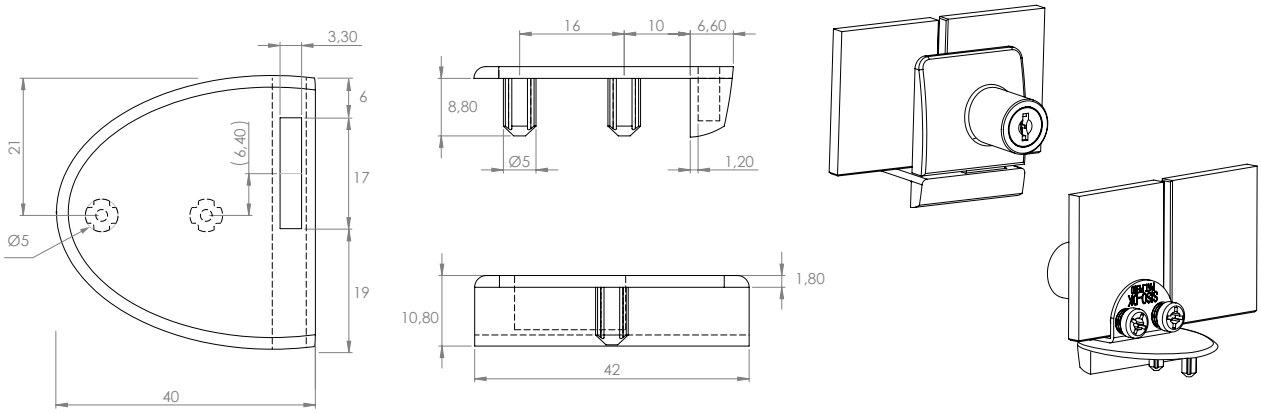

GLASS DOOR HINGE »BADGE«
F/NARROW FRAMES

TOP & BOTTOM HINGE »BADGE«
F/NARROW FRAMES

F/Wood/Glass. F/Inset doors. W/Catch function.
Ideal for cabinets with narrow frame

Material:	Zamak
Size:	27 x 30 x 43 mm (D/H/L)
Glass thickness:	4 – 6 mm
Max door size:	1000 x 400 mm (H/W)
Opening:	90 or 105 DG
Item No.:	
Chrome Plated	# 15.06.205
Alu finish	# 15.06.206
Black Anodized	# 15.06.207









SHORT MOUNTING PLATE

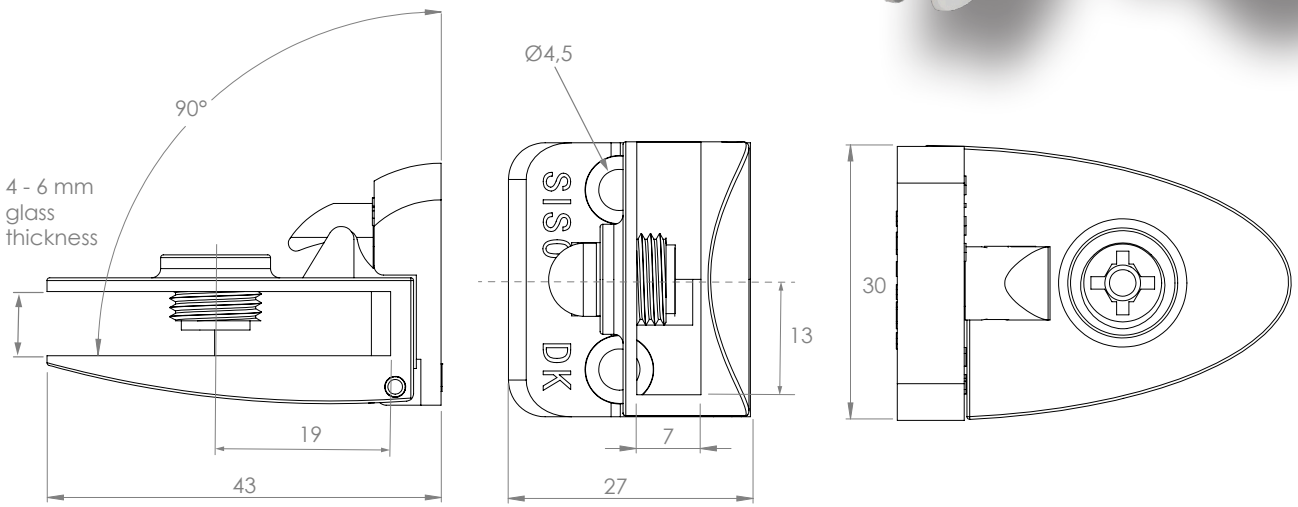

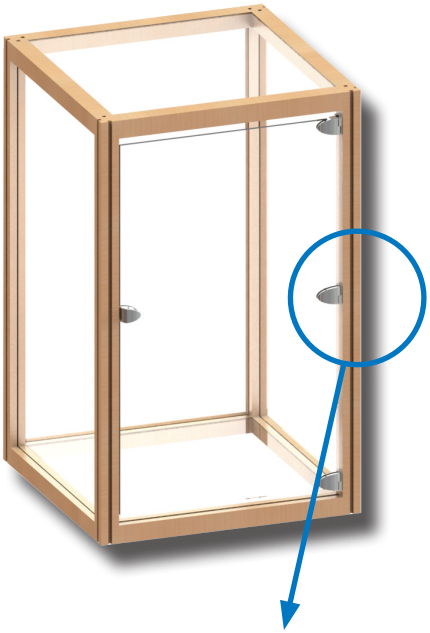

CENTRE HINGE »BADGE«
F/NARROW FRAMES

F/Wood/Glass. F/Inset doors. W/Catch function.
Ideal for cabinets with narrow frame

Material:	Zamak
Size:	27 x 30 x 43 mm (D/H/L)
Glass thickness:	4 – 6 mm
Max door size:	1000 x 400 mm (H/W)
Opening:	90 or 105 DG
Item No.:	
Chrome Plated	# 15.06.225/250
Alu finish	# 15.06.226/251
Black Anodized	# 15.06.227/252



SHORT MOUNTING PLATE



Left



Right

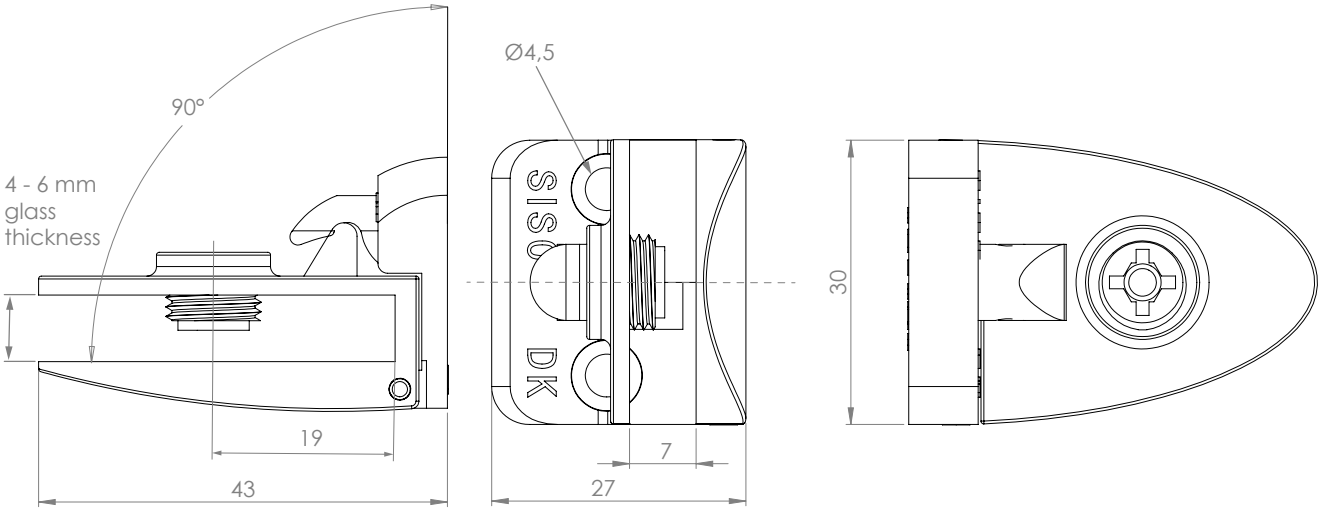



Top & Bottom Hinge

Chrome Plated	# 15.06.200-5
Alu Finish	# 15.06.201-5
Black Anodized	# 15.06.202-5



Centre Hinge

Chrome Plated	# 15.06.285
Alu Finish	# 15.06.286
Black Anodized	# 15.06.287



Handle Single Door

Chrome Plated	# 17.40.050
Alu Finish	# 17.40.051
Black Anodized	# 17.40.052
Gold Plated	# 17.40.053



Handle Double Doors

Chrome Plated	# 17.40.070
Alu Finish	# 17.40.071
Black Anodized	# 17.40.072
Gold Plated	# 17.40.073



Glass Door Lock f/ Single Doors

Chrome Plated	# 14.09.500
Alu Finish	# 14.09.501
Black Anodized	# 14.09.502
Gold Plated	# 14.09.503
Bronze Plated	# 14.09.504



Glass Door Lock f/ Double Doors

Chrome Plated	# 14.09.540
Alu Finish	# 14.09.541
Black Anodized	# 14.09.542
Gold Plated	# 14.09.543
Bronze Plated	# 14.09.544



Double Door Striker f/ Single Door Lock

Chrome Plated	# 14.09.510
Alu Finish	# 14.09.511
Black Anodized	# 14.09.512
Gold Plated	# 14.09.513
Bronze Plated	# 14.09.514



Edge Striker f/ Single Door Lock

Chrome Plated	# 14.09.515
Alu Finish	# 14.09.516
Black Anodized	# 14.09.517
Gold Plated	# 14.09.518
Bronze Plated	# 14.09.519



Edge Striker f/ Double Door Lock

Chrome Plated	# 14.09.550
Alu Finish	# 14.09.551
Black Anodized	# 14.09.552
Gold Plated	# 14.09.553
Bronze Plated	# 14.09.554



Top & Bottom Short Hinge

Chrome Plated	# 15.06.205
Alu Finish	# 15.06.206
Black Anodized	# 15.06.207



Centre Short Hinge R/L

Chrome Plated	# 15.06.225/250
Alu Finish	# 15.06.226/251
Black Anodized	# 15.06.227/252

SPARE PARTS

ZAMAK SCREW W/SOFT TIP F/HINGES & HANDLES



4mm Hex & PZD

NPL	# 15.06.243-1
Black	# 15.06.243-5

ZAMAK SCREW W/EXTENSION F/HINGES & HANDLES



4mm Hex & PZD

NPL	# 15.06.244-1
Black	# 15.06.244-2

ZAMAK SCREW W/SOFT TIP F/LOCKS



4mm Hex & PZD

NPL	# 14.09.238-5
Black	# 14.09.239

BLANK PASSION METAL KEYS



NPL # 14.04.108-9

CONCEPT »U-SEE«



DESIGN REGISTERED

- UV-GLUEING REQUIRED
- 4 - 6,75 mm GLASS
- FOR GLASS CABINETS
- HINGES, LOCKS & STRIKERS IN SAME MATCHING »SQUARE« DESIGN

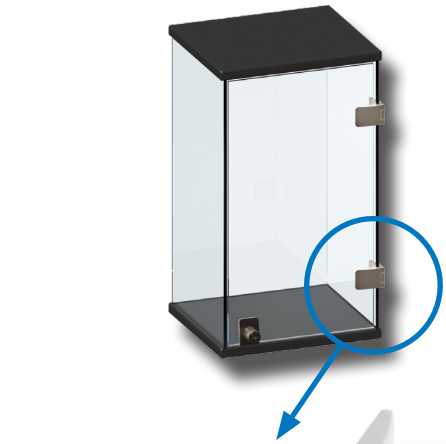

GLASS DOOR HINGE »U-SEE«
GLASS TO GLASS

Zamak hinge, glass/glass. For UV-glue.
With built-in catch. Universal. No top or bottom.

Material:	Zamak & stainless steel
Size:	44 x 30 mm
Glass thickness:	4 - 6,75 mm
Item No:	
Chrome Plated	# 15.06.290
Alu finish	# 15.06.291

Inclusive adhesive cover caps in grey and black color.

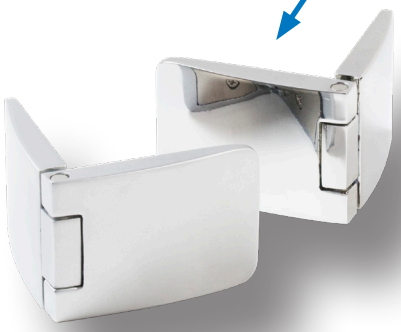

Adjustment screws for angle and tightness

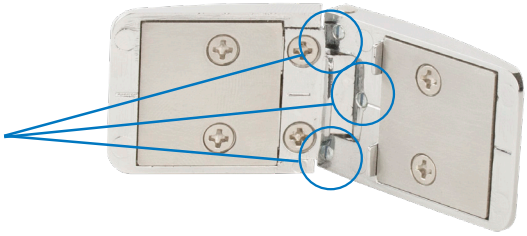

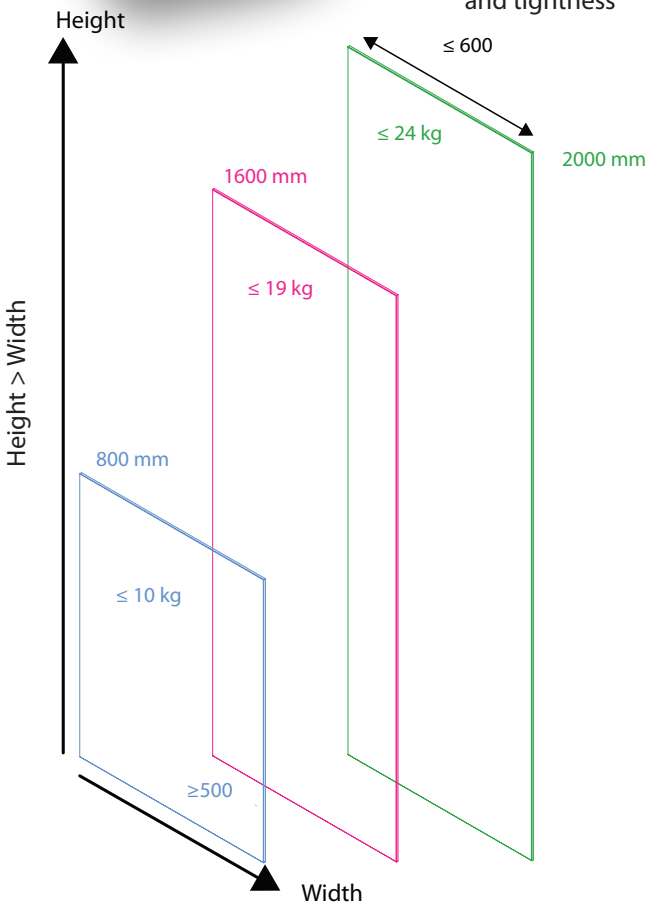

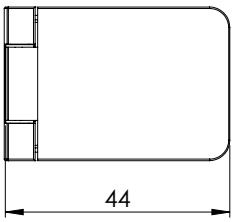

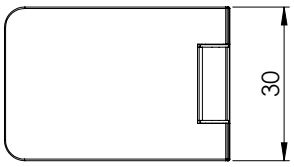

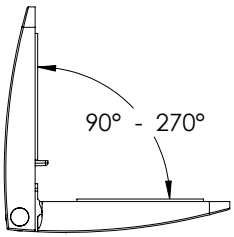

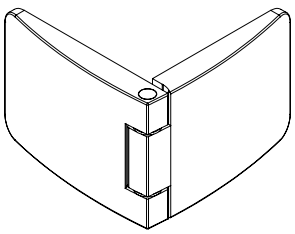

Mounting instruction: **500 mm. between hinges (center).**
(Glass height must be larger than the width)

U-See pcs.	Glass width in mm. (Max.)	Glass height in mm. (Max.)	Glass thickness in mm.	Weight Max.
2	600	800	4 - 6,76	10 kg.
3	600	1600	4 - 6,76	19 kg.
4	600	2000	4 - 6,76	24 kg.

The above will be our guideline for the hinge. Measurements are for the glass door.

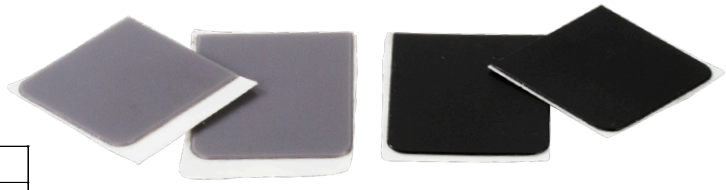

Adhesive cover caps in grey and black color.

SINGLE DOOR LOCK »U-SEE«

Zamak lock for UV-glue, W/SISO oval metal keys. 400 Key combinations. Master key & interchangeable cylinder on request.

Material:	Zamak & stainless steel
Size:	40 x 30 mm
Glass thickness:	4 - 6,75 mm
Item No:	
Chrome Plated	# 14.09.600
Alu finish	# 14.09.601

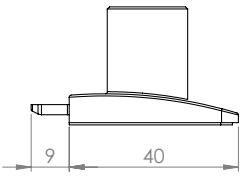

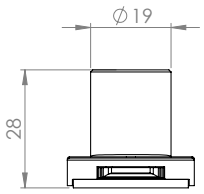

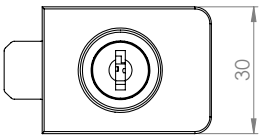

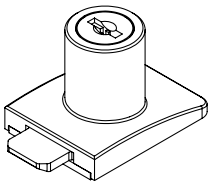





DOUBLE DOOR STRIKER »U-SEE«

Zamak double door striker for single door lock. For UV-glue.

Material:	Zamak & stainless steel
Size:	40 x 30 mm
Glass thickness:	4 - 6,75 mm
Item No:	
Chrome Plated	# 14.09.610
Alu finish	# 14.09.611





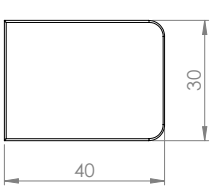

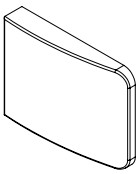

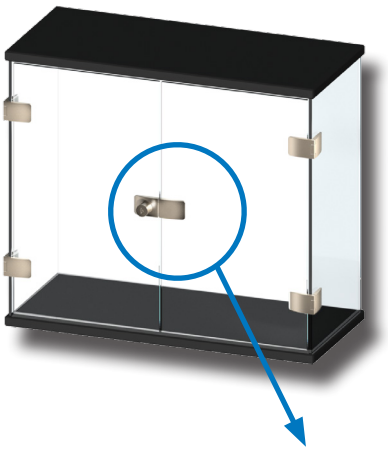



SINGLE DOOR LOCK W/
DOUBLE DOOR STRIKER

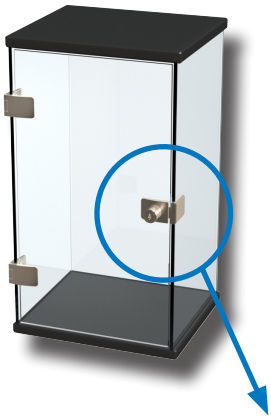



SINGLE DOOR LOCK W/
CORNER STRIKER

CORNER STRIKER »U-SEE«
F/SINGLE DOOR LOCK

Zamak corner striker for single door lock. For UV-glue.

Material:	Zamak & stainless steel
Size:	40 x 30 mm
Glass thickness:	4 - 5 or 6 - 6,75 mm

Item No:

4 - 5 mm - Chrome Plated	# 14.09.660
4 - 5 mm - Alu finish	# 14.09.661
6 - 6,75 mm - Chrome Plated	# 14.09.670
6 - 6,75 mm - Alu finish	# 14.09.671

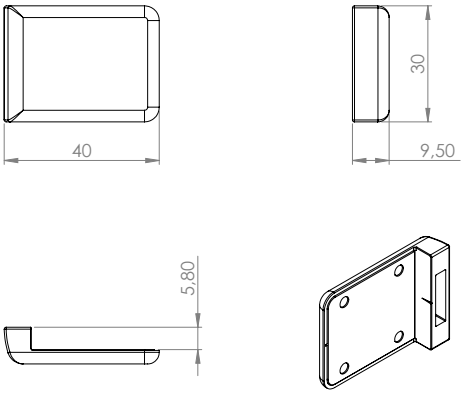

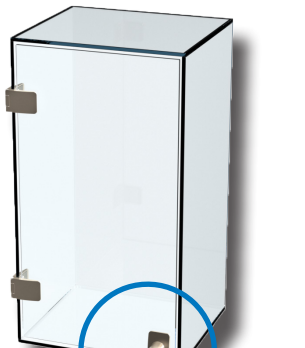



SINGLE DOOR LOCK W/BOTTOM STRIKER

BOTTOM STRIKER »U-SEE«
F/SINGLE DOOR LOCK

Zamak bottom striker for single door lock. For UV-glue.

Material:	Zamak & stainless steel
Size:	40 x 30 mm
Glass thickness:	4 - 6,75 mm

Item No:

Chrome Plated	# 14.09.650
Alu finish	# 14.09.651

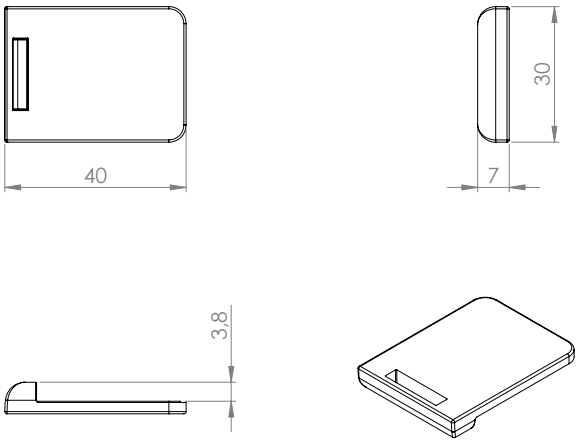

DOUBLE DOOR LOCK »U-SEE«

Zamak lock for UV-glue, W/SISO oval metal keys. 400 Key combinations. Master key & interchangeable cylinder on request.

Material:	Zamak & stainless steel
Size:	40 x 42 mm
Glass thickness:	4 - 6,75 mm
Item No:	
Chrome Plated	# 14.09.630
Alu finish	# 14.09.631

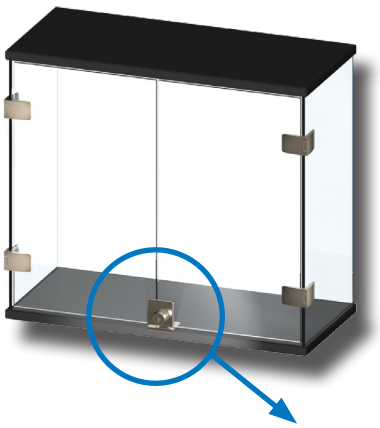

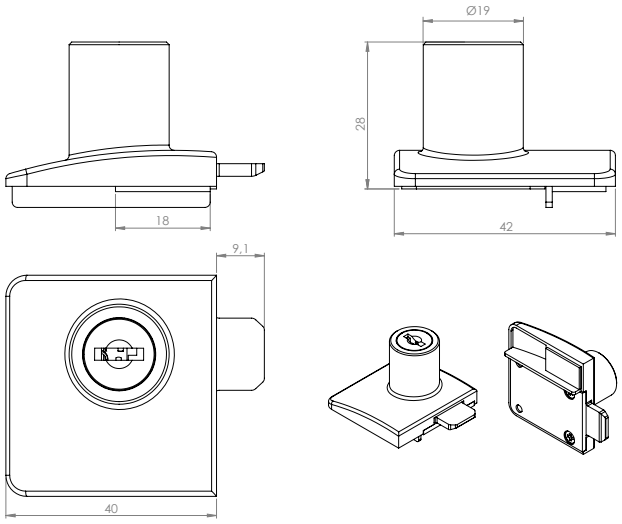



BOTTOM STRIKER »U-SEE« F/DOUBLE DOOR LOCK

Zamak Bottom striker for double door lock. For UV-glue.

Material:	Zamak & stainless steel
Size:	40 x 42 mm
Glass thickness:	4 - 6,75 mm
Item No:	
Chrome Plated	# 14.09.655
Alu finish	# 14.09.656

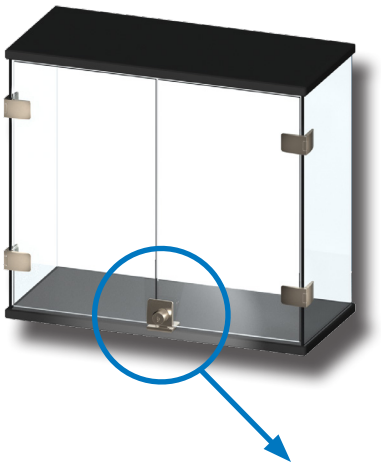

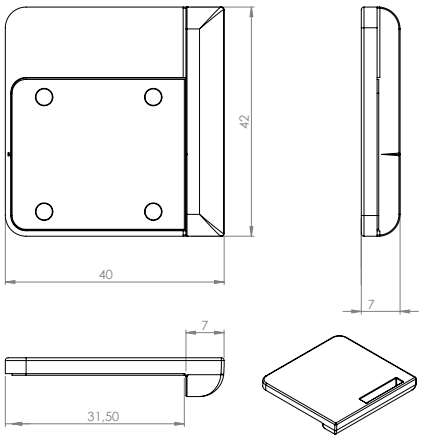



DOUBLE DOOR LOCK W/ BOTTOM STRIKER FOR DOUBLE DOOR LOCK

CONCEPT »SEE-ME«



DESIGN REGISTERED

- DRILLING REQUIRED
- 4 - 6,75 mm GLASS
- FOR WOOD & GLASS CABINETS
- UNIVERSAL. NO TOP OR BOTTOM
- ONLY HINGES AVAILABLE. CAN BE USED WITH CONCEPT »SQUARE«

GLASS DOOR HINGE »SEE-ME«
GLASS TO GLASS

F/Glass/Glass or Wood/Glass. F/Inset & overlay doors. W/Catch function. Universal.
No left/right or top/bottom

Material:	Zamak
Size:	44 x 44 x 30 mm (D/L/H)
Glass thickness:	4 – 6,75 mm
Drilling:	Ø10 mm
Max door size:	2000 x 600 mm (H/W)
Opening:	180 DG
Item No.:	
Chrome Plated	# 15.06.270
Alu finish	# 15.06.271
Black Anodized	# 15.06.272

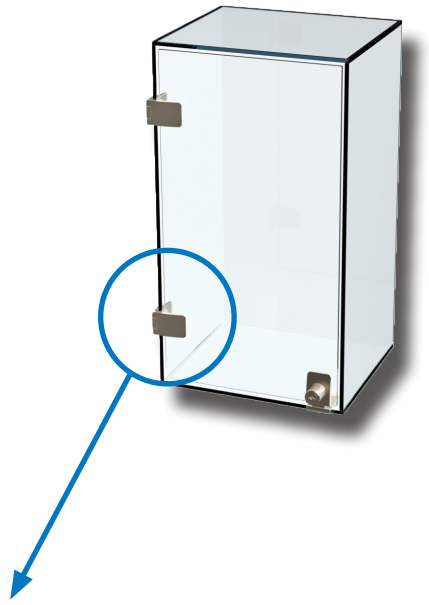





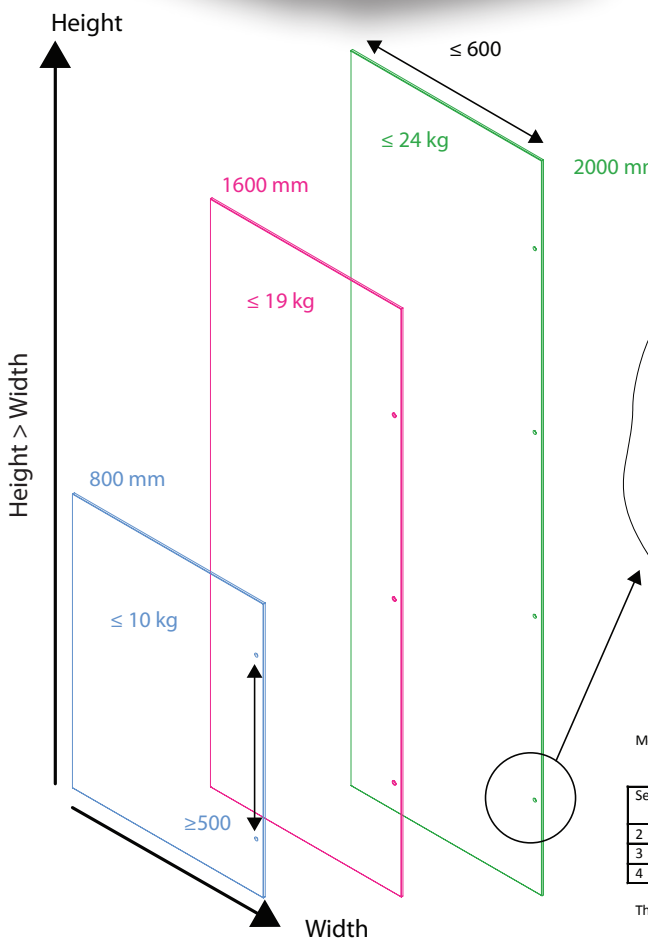

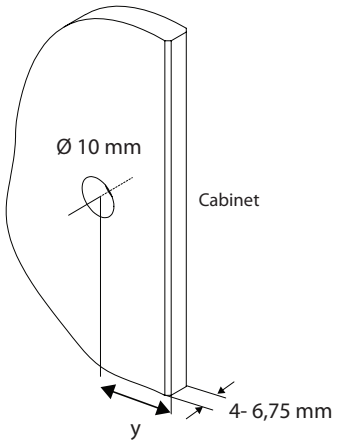

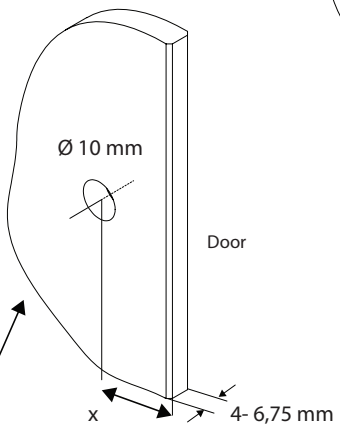

	x	y
Insert	22	25
Overlay	25	22

Mounting instruction: **500 mm. between hinges (center).**
(Glass height must be larger than the width)

See Me pcs.	Glass width in mm. (Max.)	Glass height in mm. (Max.)	Glass thickness in mm.	Weight Max.
2	600	800	4 - 6,76	10 kg.
3	600	1600	4 - 6,76	19 kg.
4	600	2000	4 - 6,76	24 kg.

The above will be our guideline for the hinge. Measurements are for the glass door.



GLASS DOOR HINGE »SEE-ME« WOOD TO GLASS

The “See-Me” glass to glass hinge can also be used for wooden side panels. Just leave out the front/cover plate.

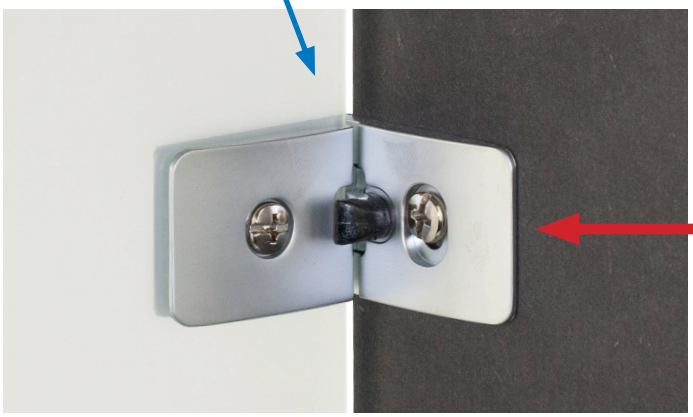



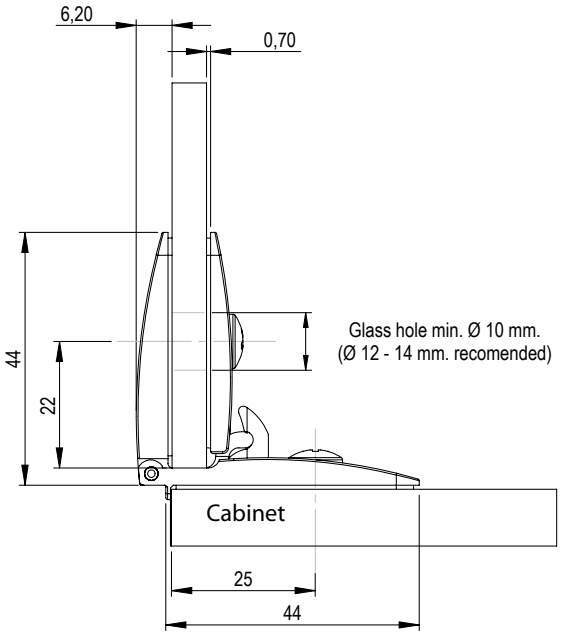

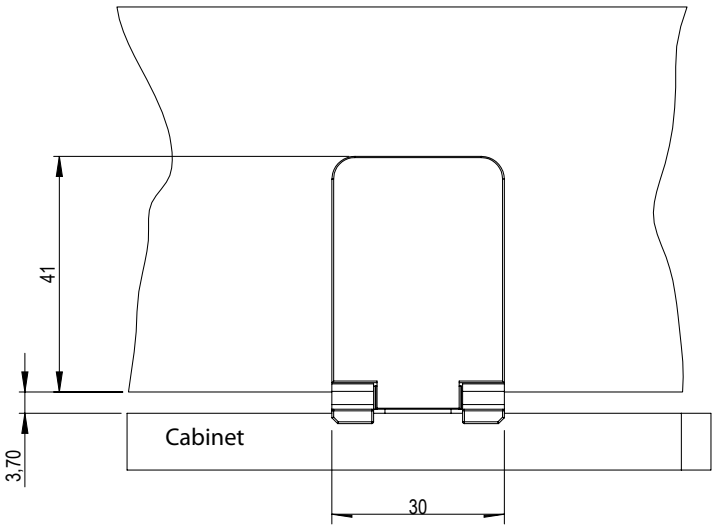

CONCEPT »CONNECT«

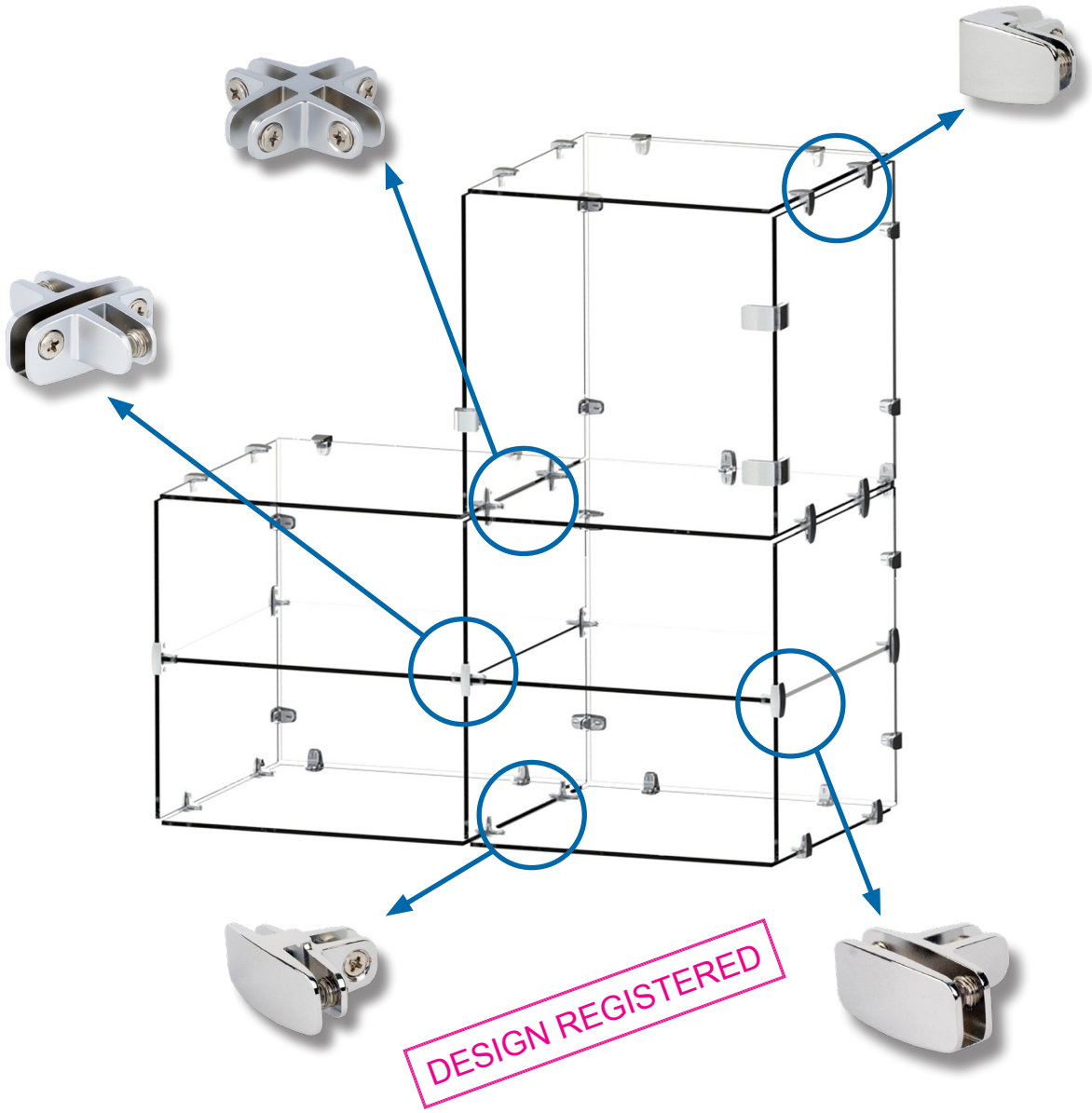

- NO DRILLING REQUIRED
- 4 - 6 mm GLASS
- FOR GLASS CABINETS
- CAN BE USED WITH CONCEPT “SEE-ME” & “U-SEE”

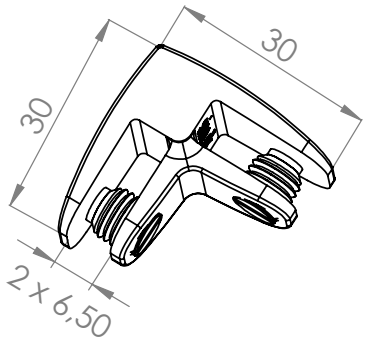

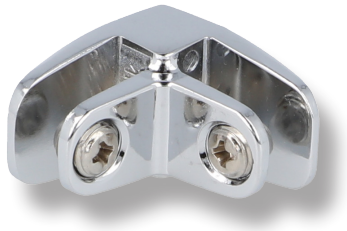

GLASS CONNECTOR 2-WAY 90º

Specification:
Material: Zamak
Glass thickness: 4-6 mm
Size: 30 x 30 x 25 (H) mm
W/Zamak screw with soft tip

Chrome plated	# 22.10.105
Alu finish	# 22.10.106

Other finishes on request.

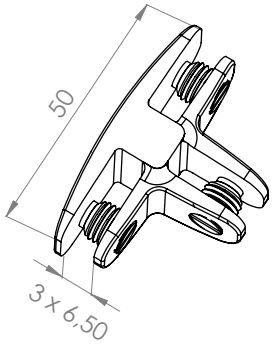

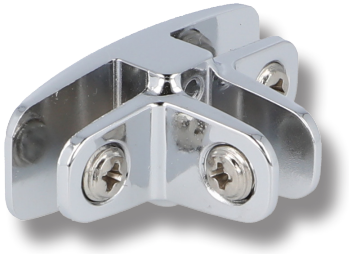

GLASS CONNECTOR 3-WAY T-JOINT

Specification:
Material: Zamak
Glass thickness: 4-6 mm
50 x 30 x 25 mm height
W/Zamak screw with soft tip

Chrome plated	# 22.10.115
Alu finish	# 22.10.116

Other finishes on request.

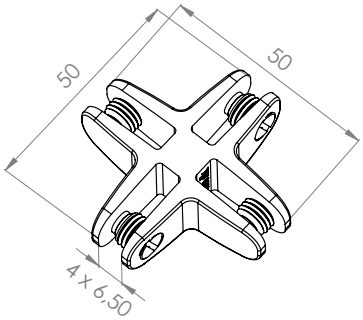

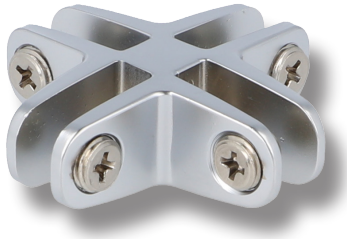

GLASS CONNECTOR 4-WAY 90º

Specification:
Material: Zamak
Glass thickness: 4-6 mm
50 x 50 x 25 mm height
W/Zamak screw with soft tip

Chrome plated	# 22.10.125
Alu finish	# 22.10.126

Other finishes on request.

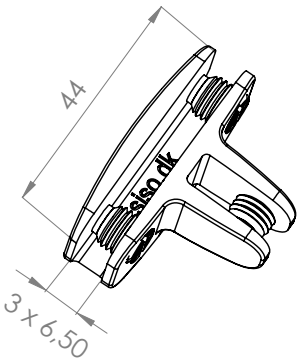



GLASS CONNECTOR 3-WAY CLOSED T-JOINT

Specification:
Material: Zamak
Glass thickness: 4-6 mm
50 x 44 x 25 mm
Closed end - bottom/top connector
W/Zamak screw with soft tip

Chrome plated	# 22.10.135
Alu finish	# 22.10.136

Other finishes on request.

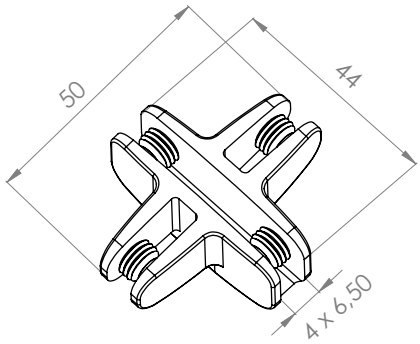

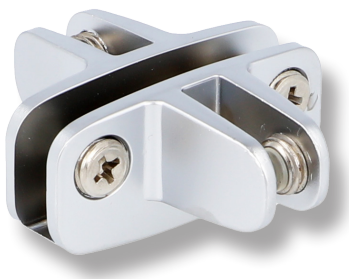

GLASS CONNECTOR 4-WAY CLOSED 90º

Specification:
Material: Zamak
Glass thickness: 4-6 mm
50 x 44 x 25 mm
Closed end - bottom/top connector
W/Zamak screw with soft tip

Chrome plated	# 22.10.144
Alu finish	# 22.10.145

Other finishes on request.

»U-SEE«



»U-SEE« Double door lock

Chrome Plated	# 14.09.630
Alu Finish	# 14.09.631



»U-SEE« Single door lock

Chrome Plated	# 14.09.600
Alu Finish	# 14.09.601



»U-SEE« Hinge

Chrome Plated	# 15.06.290
Alu Finish	# 15.06.291

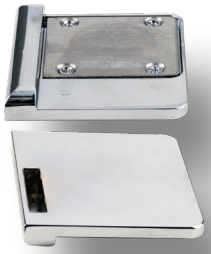

»U-SEE« Bottom striker double door

Chrome Plated	# 14.09.655
Alu Finish	# 14.09.656



»U-SEE« Bottom striker single door

Chrome Plated	# 14.09.650
Alu Finish	# 14.09.651



»U-SEE« Double door striker

Chrome Plated	# 14.09.610
Alu Finish	# 14.09.611



»U-SEE« Corner striker

Chrome Plated	# 14.09.660 f/4-5 mm glass
Alu Finish	# 14.09.661 f/4-5 mm glass
Chrome Plated	# 14.09.670 f/6-6,75 mm glass
Alu Finish	# 14.09.671 f/6-6,75 mm glass

»SEE-ME« HINGE GLASS TO GLASS



»SEE-ME« Hinge

Chrome Plated	# 15.06.270
Alu Finish	# 15.06.271
Black Anodized	# 15.06.272

GLASS CONNECTORS »CONNECT«



Glass Connector 90⁰

Chrome Plated	# 22.10.105
Alu Finish	# 22.10.106



Glass Connector
3 way T- joint

Chrome Plated	# 22.10.115
Alu Finish	# 22.10.116



Glass Connector
4 way joint 90⁰

Chrome Plated	# 22.10.125
Alu Finish	# 22.10.126



Glass Connector
3 way closed T- joint

Chrome Plated	# 22.10.135
Alu Finish	# 22.10.136



Glass Connector
4 way closed joint 90⁰

Chrome Plated	# 22.10.144
Alu Finish	# 22.10.145

NOTES

SISO DENMARK

- high quality furniture fittings

DESIGN REGISTERED

Item No.: 99.00.015

03.05.2022

SISO A/S

Mileparken 11
DK - 2740 Skovlunde
Denmark

Phone: (+45) 45 830 900
E-mail: siso@siso.dk Web: www.siso.dk